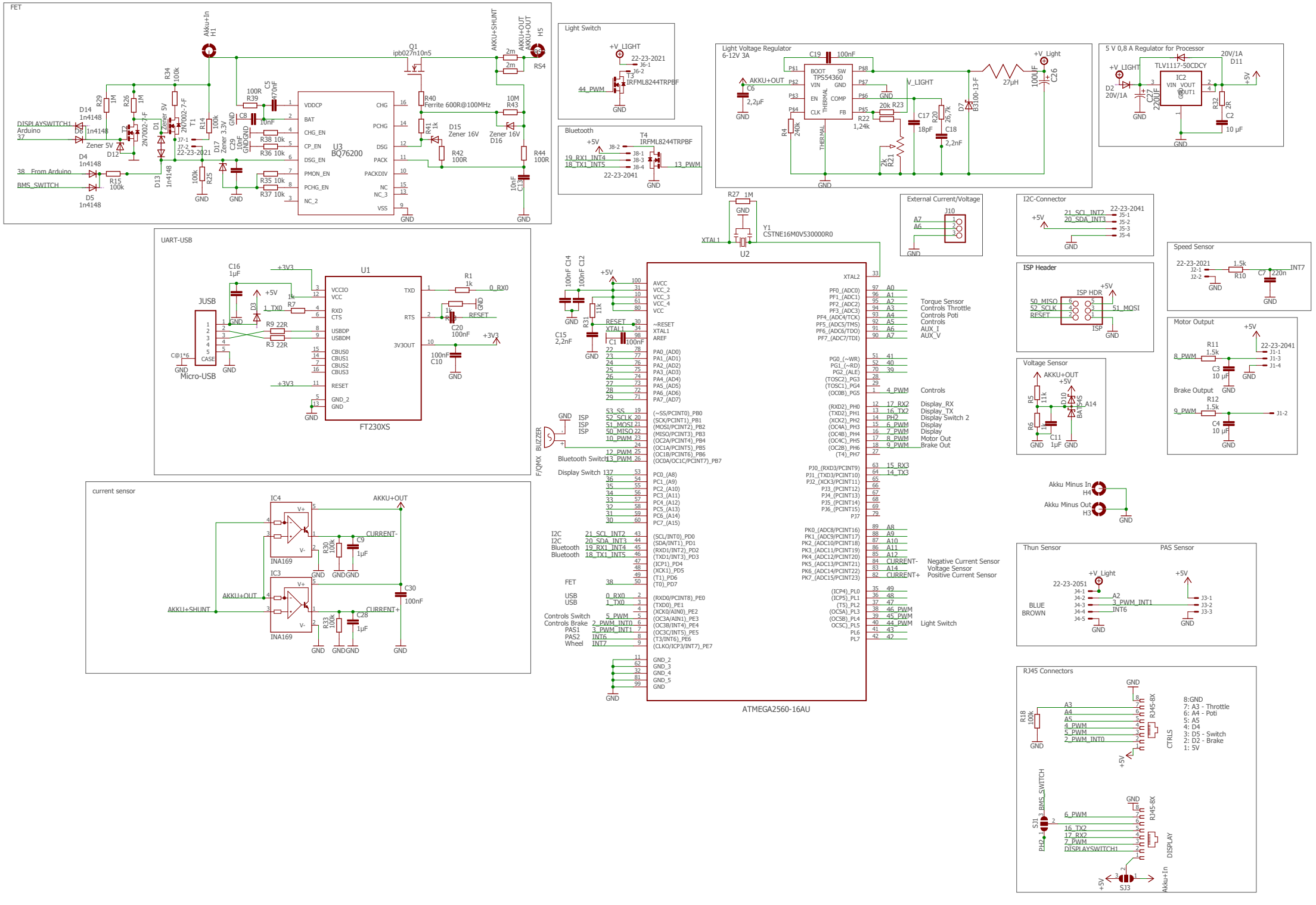
FET
Akku+In
H1
Q1
ipb027n10n5
AKKU+SHUNT
AKKU+OUT
H5
RS4
2m
2m
R34
100k
R29
1M
R26
1M
D14
1n4148
D6
1n4148
DISPLAYSWITCH1
Arduino
37
Zener 5V
D12
D1
Zener 5V
2N7002-7-F
T1
R14
100k
J7-1
J7-2
22-23-2021
D4
1n4148
38 From Arduino
BMS_SWITCH
R15
100k
D5
1n4148
D13
1n4148
100k
R25
GND
GND
R39
100R
C5
470nF
C8
10nF
R38 10k
R36 10k
D17
Zener 3.3V
C29
10nF
R35 10k
R37 10k
U3
BQ76200
VDDCP
BAT
CHG_EN
CP_EN
DSG_EN
PMON_EN
PCHG_EN
NC_2
CHG
PCHG
DSG
PACK
PACKDIV
NC
NC_3
VSS
R40
Ferrite 600R@100MHz
R41
1k
D15
Zener 16V
R42
100R
10M
R43
Zener 16V
D16
R44
100R
10nF
C13
GND
GND
Light Switch
+V_LIGHT
22-23-2021
J6-1
J6-2
T3
IRFML8244TRPBF
44_PWM
GND
Bluetooth
+5V
J8-2
T4
IRFML8244TRPBF
19_RX1_INT4
18_TX1_INT5
J8-1
J8-3
J8-4
13_PWM
22-23-2041
GND
Light Voltage Regulator
6-12V 3A
C19
100nF
AKKU+OUT
C6
2,2µF
GND
TPS54360
BOOT
SW
VIN
GND
EN
COMP
CLK
FB
THERMAL
P$1
P$2
P$3
P$4
P$8
P$7
P$6
P$5
GND
R4
240k
V_LIGHT
20k R23
R22
1,24k
C17
18pF
R20
26,7k
C18
2,2nF
2k
R21
D7
B3100-13-F
27µH
100µF
C26
+V_Light
GND
5 V 0,8 A Regulator for Processor
+V_LIGHT
D2
20V/1A
C27
220µF
GND
TLV1117-50CDCY
IC2
VIN
VOUT
GND
ADJ/OUT1
20V/1A
D11
+5V
R32
2R
C2
10 µF
GND
R27 1M
GND
Y1
CSTNE16M0V530000R0
XTAL1
U2
External Current/Voltage
J10
A7
A6
GND
I2C-Connector
+5V
21_SCL_INT2
20_SDA_INT3
22-23-2041
J5-1
J5-2
J5-3
J5-4
GND
Speed Sensor
22-23-2021
J2-1
J2-2
1,5k
R10
C7
220n
INT7
GND
ISP Header
+5V
ISP HDR
50_MISO
52_SCLK
RESET
51_MOSI
ISP
GND
Motor Output
+5V
R11
1,5k
8_PWM
22-23-2041
J1-1
J1-3
J1-4
C3
10 µF
GND
Brake Output
R12
1,5k
9_PWM
J1-2
C4
10 µF
GND
Voltage Sensor
AKKU+OUT
+5V
R5
11k
D10
BAT543
A14
R6
1k
C11
1µF
GND
GND
UART-USB
C16
1µF
+3V3
U1
JUSB
+5V
1k
1_TX0
R7
D3
GND
R9 22R
R3 22R
C@1*6
CASE
Micro-USB
GND
GND
VCCIO
VCC
RXD
CTS
USBDP
USBDM
CBUS0
CBUS1
CBUS2
CBUS3
RESET
GND_2
GND
TXD
RTS
3V3OUT
R1
1k
0_RX0
GND
1k
R2
RESET
C20
100nF
+3V3
100nF
C10
GND
FT230XS
current sensor
IC4
AKKU+OUT
V+
V-
INA169
CURRENT-
R30
100k
C9
1µF
GND
GND
GND
IC3
AKKU+OUT
AKKU+SHUNT
C30
100nF
CURRENT+
R33
100k
C28
1µF
INA169
GND
GND
GND
GND
100nF C14
100nF C12
+5V
GND
R31
11k
C15
2,2nF
GND
RESET
XTAL1
C1
100nF
ISP
ISP
ISP
GND
BUZZER
F/QMX
Bluetooth Switch
Display Switch
I2C 21_SCL_INT2
I2C 20_SDA_INT3
Bluetooth 19_RX1_INT4
Bluetooth 18_TX1_INT5
FET 38
USB 0_RX0
USB 1_TX0
Controls Switch 5_PWM
Controls Brake 2_PWM_INT0
PAS1 3_PWM_INT1
PAS2 INT6
Wheel INT7
GND_2
GND_3
GND_4
GND_5
GND
GND
AVCC
VCC_2
VCC_3
VCC_4
VCC
~RESET
XTAL1
AREF
PA0_(AD0)
PA1_(AD1)
PA2_(AD2)
PA3_(AD3)
PA4_(AD4)
PA5_(AD5)
PA6_(AD6)
PA7_(AD7)
(~SS/PCINT0)_PB0
(SCK/PCINT1)_PB1
(MOSI/PCINT2)_PB2
(MISO/PCINT3)_PB3
(OC2A/PCINT4)_PB4
(OC1A/PCINT5)_PB5
(OC1B/PCINT6)_PB6
(OC0A/OC1C/PCINT7)_PB7
PC0_(A8)
PC1_(A9)
PC2_(A10)
PC3_(A11)
PC4_(A12)
PC5_(A13)
PC6_(A14)
PC7_(A15)
(SCL/INT0)_PD0
(SDA/INT1)_PD1
(RXD1/INT2)_PD2
(TXD1/INT3)_PD3
(ICP1)_PD4
(XCK1)_PD5
(T1)_PD6
(T0)_PD7
(RXD0/PCINT8)_PE0
(TXD0)_PE1
(XCK0/AIN0)_PE2
(OC3A/AIN1)_PE3
(OC3B/INT4)_PE4
(OC3C/INT5)_PE5
(T3/INT6)_PE6
(CLKO/ICP3/INT7)_PE7
XTAL2
PF0_(ADC0)
PF1_(ADC1)
PF2_(ADC2)
PF3_(ADC3)
PF4_(ADC4/TCK)
PF5_(ADC5/TMS)
PF6_(ADC6/TDO)
PF7_(ADC7/TDI)
PG0_(~WR)
PG1_(~RD)
PG2_(ALE)
(TOSC2)_PG3
(TOSC1)_PG4
(OC0B)_PG5
(RXD2)_PH0
(TXD2)_PH1
(XCK2)_PH2
(OC4A)_PH3
(OC4B)_PH4
(OC4C)_PH5
(OC2B)_PH6
(T4)_PH7
PJ0_(RXD3/PCINT9)
PJ1_(TXD3/PCINT10)
PJ2_(XCK3/PCINT11)
PJ3_(PCINT12)
PJ4_(PCINT13)
PJ5_(PCINT14)
PJ6_(PCINT15)
PJ7
PK0_(ADC8/PCINT16)
PK1_(ADC9/PCINT17)
PK2_(ADC10/PCINT18)
PK3_(ADC11/PCINT19)
PK4_(ADC12/PCINT20)
PK5_(ADC13/PCINT21)
PK6_(ADC14/PCINT22)
PK7_(ADC15/PCINT23)
(ICP4)_PL0
(ICP5)_PL1
(T5)_PL2
(OC5A)_PL3
(OC5B)_PL4
OC5C)_PL5
PL6
PL7
A0
A1
A2
A3
A4
A5
A6
A7
Torque Sensor
Controls Throttle
Controls Poti
Controls
AUX_I
AUX_V
4_PWM
Controls
17_RX2
16_TX2
Display_RX
Display_TX
PH2
Display Switch 2
6_PWM
7_PWM
Display
Display
8_PWM
9_PWM
Motor Out
Brake Out
15_RX3
14_TX3
A8
A9
A10
A11
A12
CURRENT-
A14
CURRENT+
Negative Current Sensor
Voltage Sensor
Positive Current Sensor
46_PWM
45_PWM
44_PWM
43
42
Light Switch
GND
Akku Minus In
H4
Akku Minus Out
H3
GND
Thun Sensor
PAS Sensor
+V_Light
22-23-2051
J4-1
J4-2
J4-3
J4-4
J4-5
BLUE
BROWN
A2
3_PWM_INT1
INT6
GND
+5V
J3-1
J3-2
J3-3
GND
RJ45 Connectors
GND
R18
100k
GND
A3
A4
A5
4_PWM
5_PWM
2_PWM_INT0
RJ45-8X
CTRLS
+5V
8:GND
7: A3 - Throttle
6: A4 - Poti
5: A5
4: D4
3: D5 - Switch
2: D2 - Brake
1: 5V
BMS_SWITCH
S11
PH2
GND
6_PWM
16_TX2
17_RX2
7_PWM
DISPLAYSWITCH1
RJ45-8X
DISPLAY
+5V
SJ3
Akku+In